ASFORA BULLET CAGE® SYSTEM

Designed for rapid fusion with maximum versatility in interbody and instrument choices.

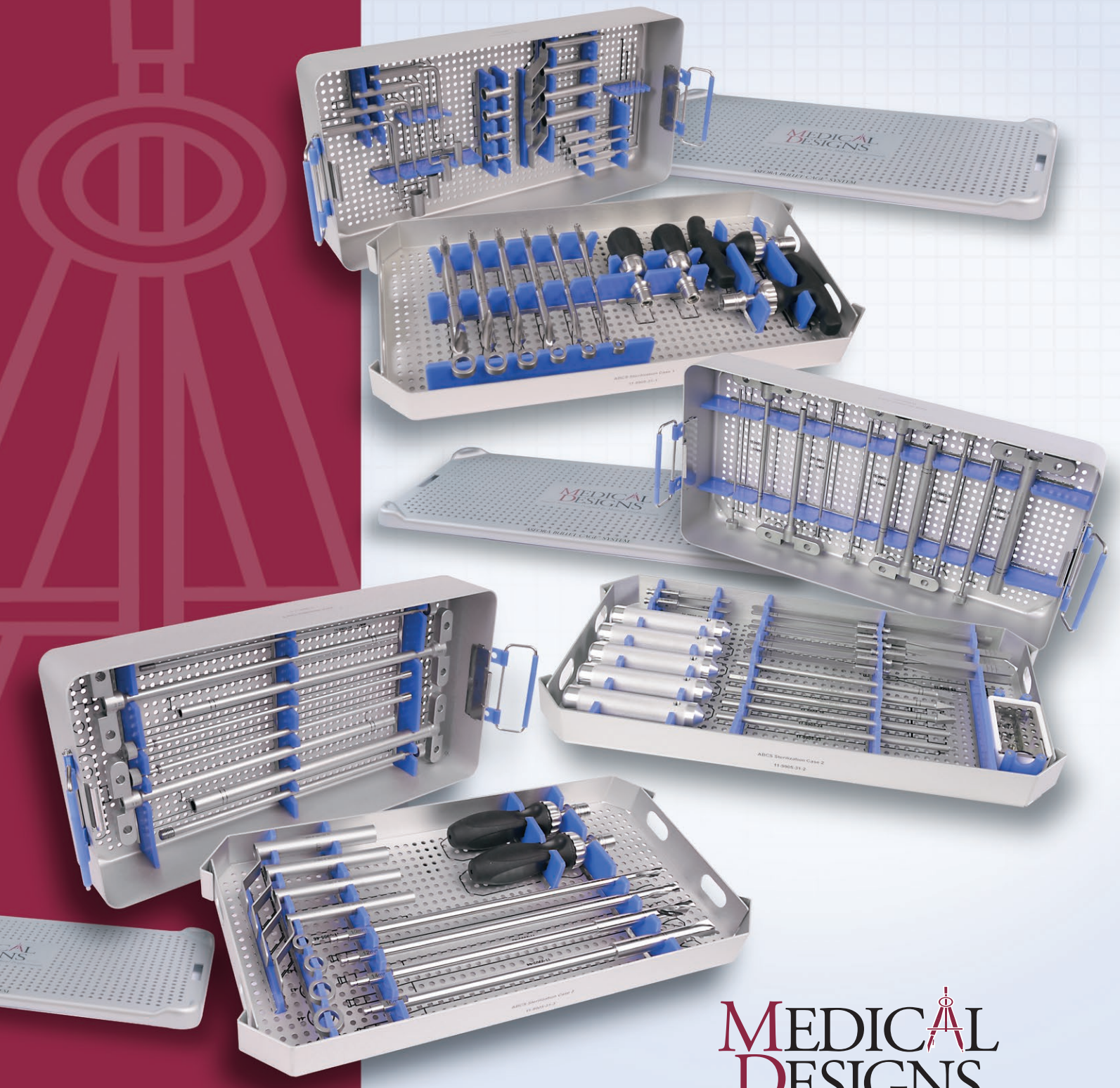

MEDICAL DESIGNS L.L.C.

Surgical Instruments Designed by Medical Professionals

A Complete Set of Precision Surgical

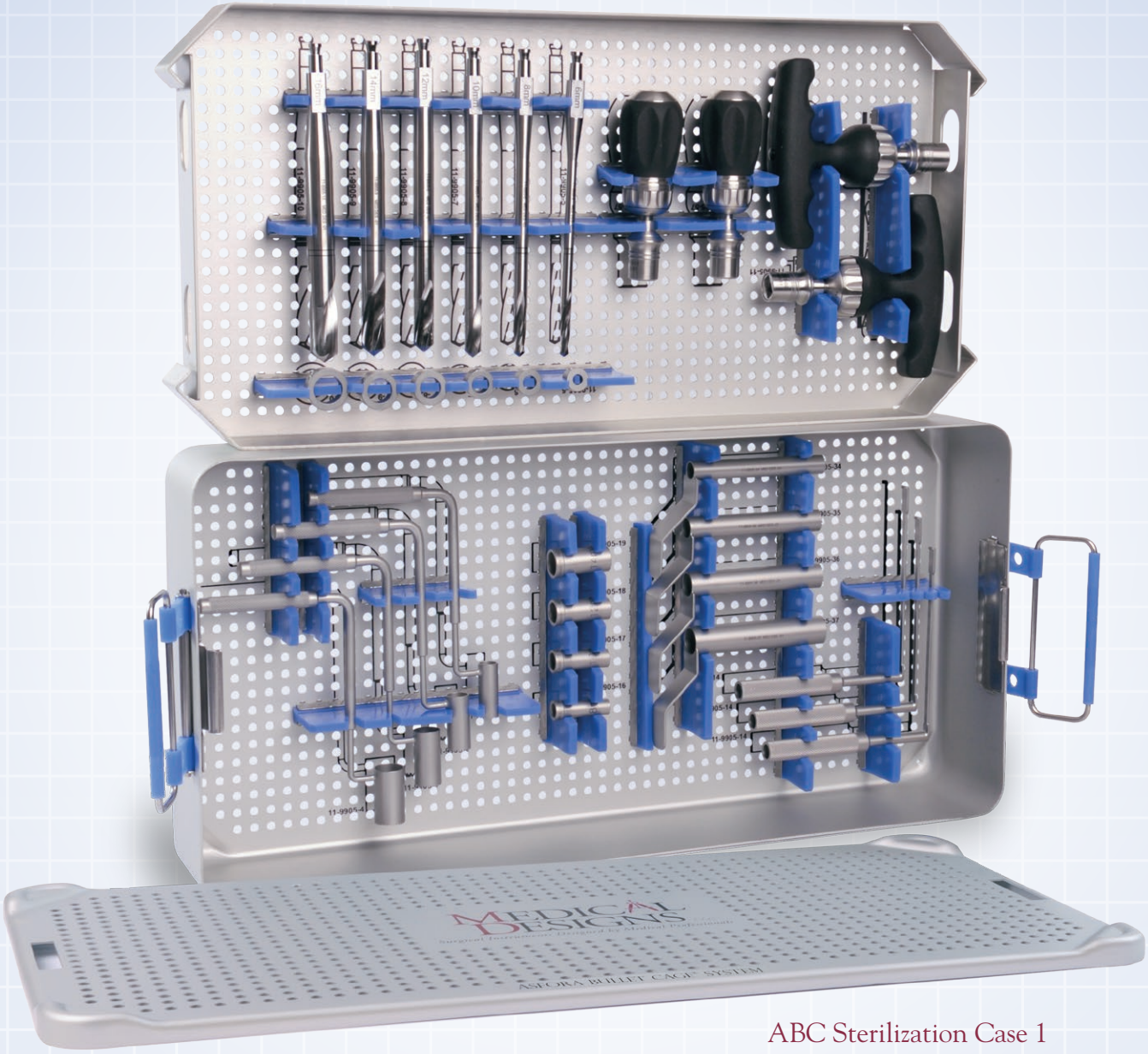

ABC Sterilization Case 1
11-9905-FD31-1CS

Case 1 includes the following instruments as shown: Single Drill Guides, Drill Bits with Stop Collars, Hudson T-Handles, Hudson Palm Handles, Rigid Retractors, Inner Cannulas, and Short Modified Drill Guides.

To Order Call: (888) 276-7271 or inquire online at www.medicaldesignsllc.com

Instruments Specifically Designed For Interbody

ABC Sterilization Case 2
11-9905-FD31-2CS

Case 2 includes the following instruments as shown: Disc Space Distractors, Extended Disc Space Distractors, Malleable Retractor, Endcap Screwdrivers, Cage Screwdrivers, Cage Removal Screwdriver, Cage Inserters and Allen Wrench with Tray Caddy.

MEDICAL DESIGNS LLC
Surgical Instruments Designed by Medical Professionals

ASFORA
BULLET CAGE® SYSTEM

Fusion Utilizing The Asfora Bullet Cage®

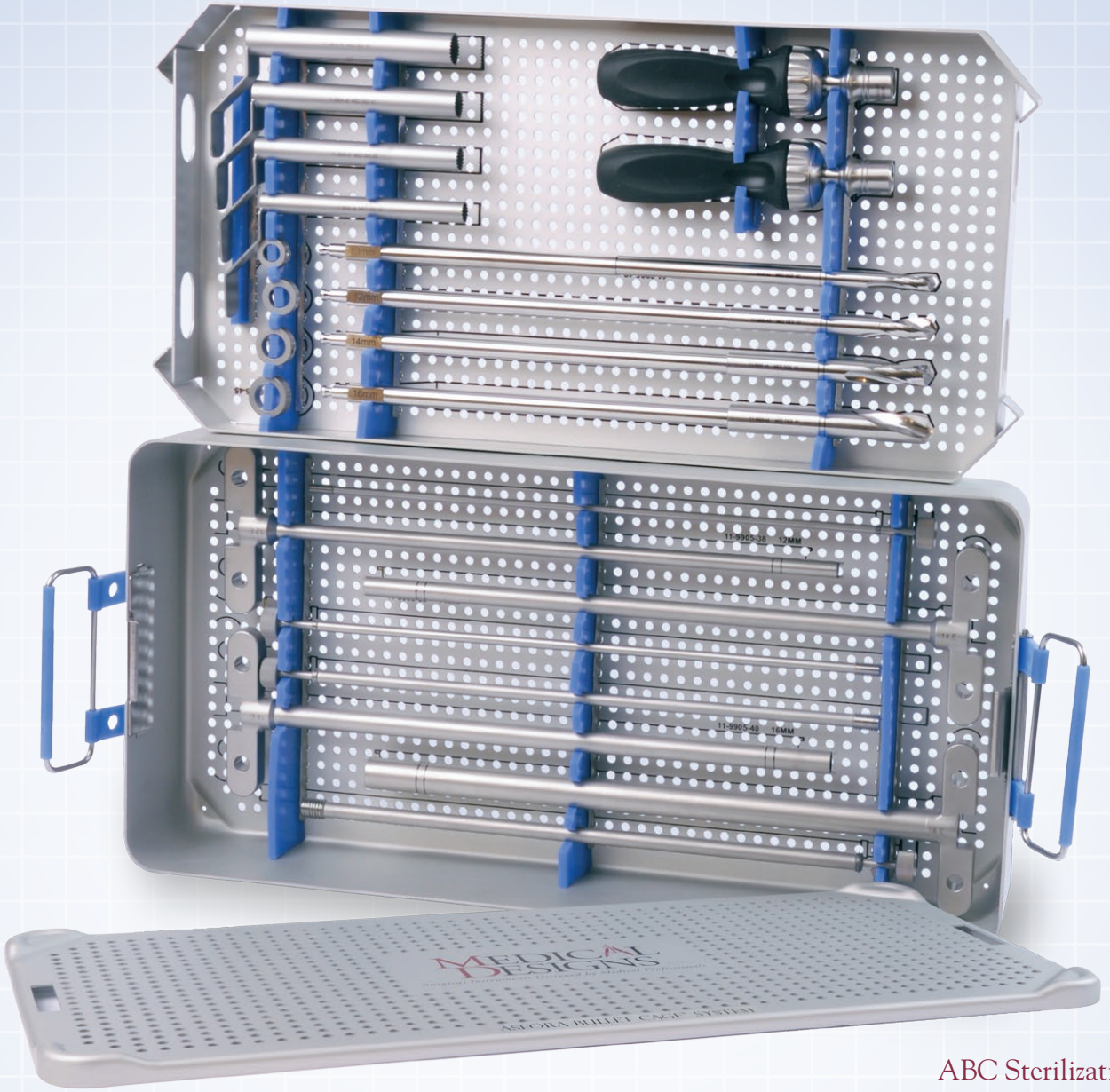

Case 3 includes the following instruments as shown: Extended Cage Inserters, Extended Drill Bits with Stop Collars, Long Modified Drill Guides, and Hudson Axial Extreme Handles.

Each set of Asfora Bullet Cage® instruments is organized in a compact, durable custom-designed aluminum sterilization case.

ABC Sterilization Case 3
11-9905-FD31-3CS

ABC Complete
Instrument Set (all 3 Cases)
11-9905-FD31

Each lightweight aluminum case measures approx. 21" X 10" X 4" with lid, tray and base. Features silicon handles that are attached to the base (not the cover) securing the cover in place for easy transport.

MEDICAL DESIGNS L.L.C.

Surgical Instruments Designed by Medical Professionals

ASFORA
BULLET CAGE® SYSTEM

System designed for use in lumbar fusion procedures including ALIF, PLIF and TLIF.

The Asfora Bullet Cage® (ABC) is a hollow-body, titanium threaded fusion device that is self-tapping and bullet shaped designed to immobilize adjacent vertebra and promote arthrodesis (fusion) across the disc space. The ABC System was designed by surgeons for surgeons to give intraoperative choices to match the patient's anatomy and facilitate a variety of surgical preferences and needs. The ABC System is a multi-component system including titanium implantable devices as well as instrumentation made of biocompatible materials such as titanium alloy and stainless steel.

Features of the Asfora Bullet Cage® System

Implant Set Features

- Precision machined devices in a range of sizes to accommodate patient anatomy. Available in five diameters and two lengths.
- Sleek, modern bullet shaped design to facilitate easier insertion.
- Large cutting threads, angles toward the proximal end, allowing the device to be self-distracting and self-tapping.
- Threaded design enhances purchase to the vertebral endplates, decreasing the possibility of migration.
- Large slot aperatures allow for greater bone growth through the cage.
- Closed at both ends to prevent leakage of any fusion inducing material.

Instrument Set Features

- Instrumentation for each approach is found in one complete set for maximum efficiency and ease of use.
- Instruments ergonomically designed with close attention to surgeon's preferences and aesthetics.
- Extended length instruments available in a variety of sizes to accommodate a full range of anatomical differences.
- Sizes clearly etched on each instrument for easy identification.

Asfora Bullet Cages Available in 10 Sizes

21mm Length x Diameter		25mm Length x Diameter	
10mm	11-9902-FD-1	10mm	11-9902-FD2
12mm	11-9902-FD-3	12mm	11-9902-FD4
14mm	11-9902-FD-5	14mm	11-9902-FD6
16mm	11-9902-FD-7	16mm	11-9902-FD8
18mm	11-9902-FD-9	18mm	11-9902-FD10

Asfora Bullet Cage®

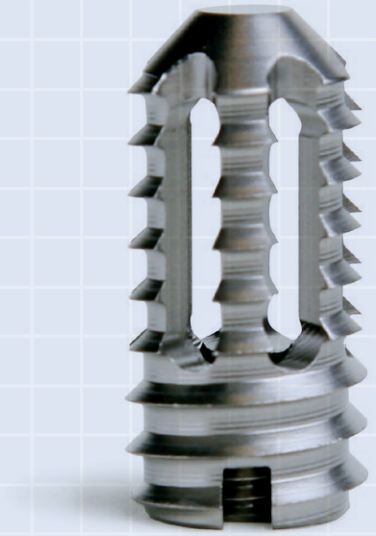

ASFORA
BULLET CAGE® SYSTEM

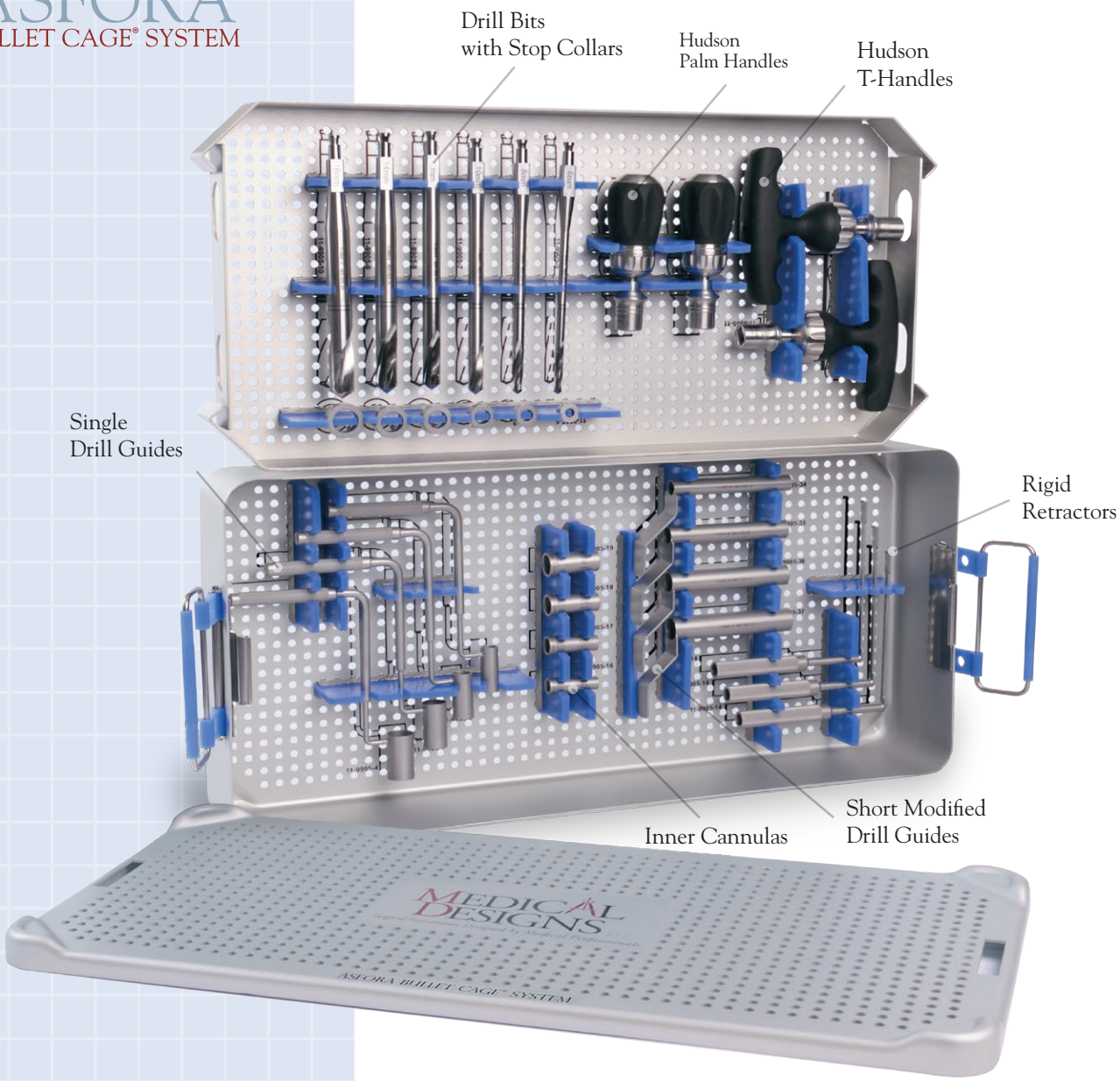

Sterilization Case 1

Case 1 Instruments

Qty	Item Number	Description
1	11-9905-FD1	10mm Single Drill Guide
1	11-9905-FD2	12mm Single Drill Guide
1	11-9905-FD3	14mm Single Drill Guide
1	11-9905-FD4	16mm Single Drill Guide
1	11-9905-FD5	6mm Drill Bit
1	11-9905-FD6	8mm Drill Bit
1	11-9905-FD7	10mm Drill Bit
1	11-9905-FD8	12mm Drill Bit
1	11-9905-FD9	14mm Drill Bit
1	11-9905-FD10	16mm Drill Bit
2	11-9905-FD11	Hudson T-Handle

Qty	Item Number	Description
3	11-9905-FD14	Rigid Retractor
1	11-9905-FD16	8mm Inner Cannula
1	11-9905-FD17	10mm Inner Cannula
1	11-9905-FD18	12mm Inner Cannula
1	11-9905-FD19	14mm Inner Cannula
1	11-9905-FD31-1	Sterilization Case 1
1	11-9905-FD34	10mm Short Modified Drill Guide
1	11-9905-FD35	12mm Short Modified Drill Guide
1	11-9905-FD36	14mm Short Modified Drill Guide
1	11-9905-FD37	16mm Short Modified Drill Guide
2	11-9905-FD57	Hudson Palm Handle

Case 2 Instruments

Qty	Item Number	Description
1	11-9905-FD12	6mm Disc Space Distractor
1	11-9905-FD13	8mm Disc Space Distractor
1	11-9905-FD15	Malleable Retractor
1	11-9905-FD22	Large Endcap Screwdriver
1	11-9905-FD23	Small Endcap Screwdriver
1	11-9905-FD24	Large Cage Screwdriver
1	11-9905-FD25	Small Cage Screwdriver
1	11-9905-FD26	Cage Removal Screwdriver
1	11-9905-FD28	12mm Cage Inserter
1	11-9905-FD29	14mm Cage Inserter

Qty	Item Number	Description
1	11-9905-FD30	Cage Inserter (16mm)
1	11-9905-FD31-2	Sterilization Case 2 w/Caddy
1	11-9905-FD32	Cage Inserter (10mm)
1	11-9905-FD33	Cage Inserter (18mm)
2	11-9905-FD59	Extended 6mm Disc Space Distractor
2	11-9905-FD60	Extended 8mm Disc Space Distractor
2	11-9905-FD61	Extended 10mm Disc Space Distractor
2	11-9905-FD62	Extended 12mm Disc Space Distractor
2	11-9905-FD63	Extended 14mm Disc Space Distractor
1	11-9905-FD64	ABC Allen Wrench

ASFORA
BULLET CAGE® SYSTEM

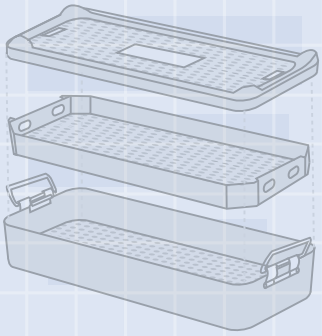

Lid, Tray & Base

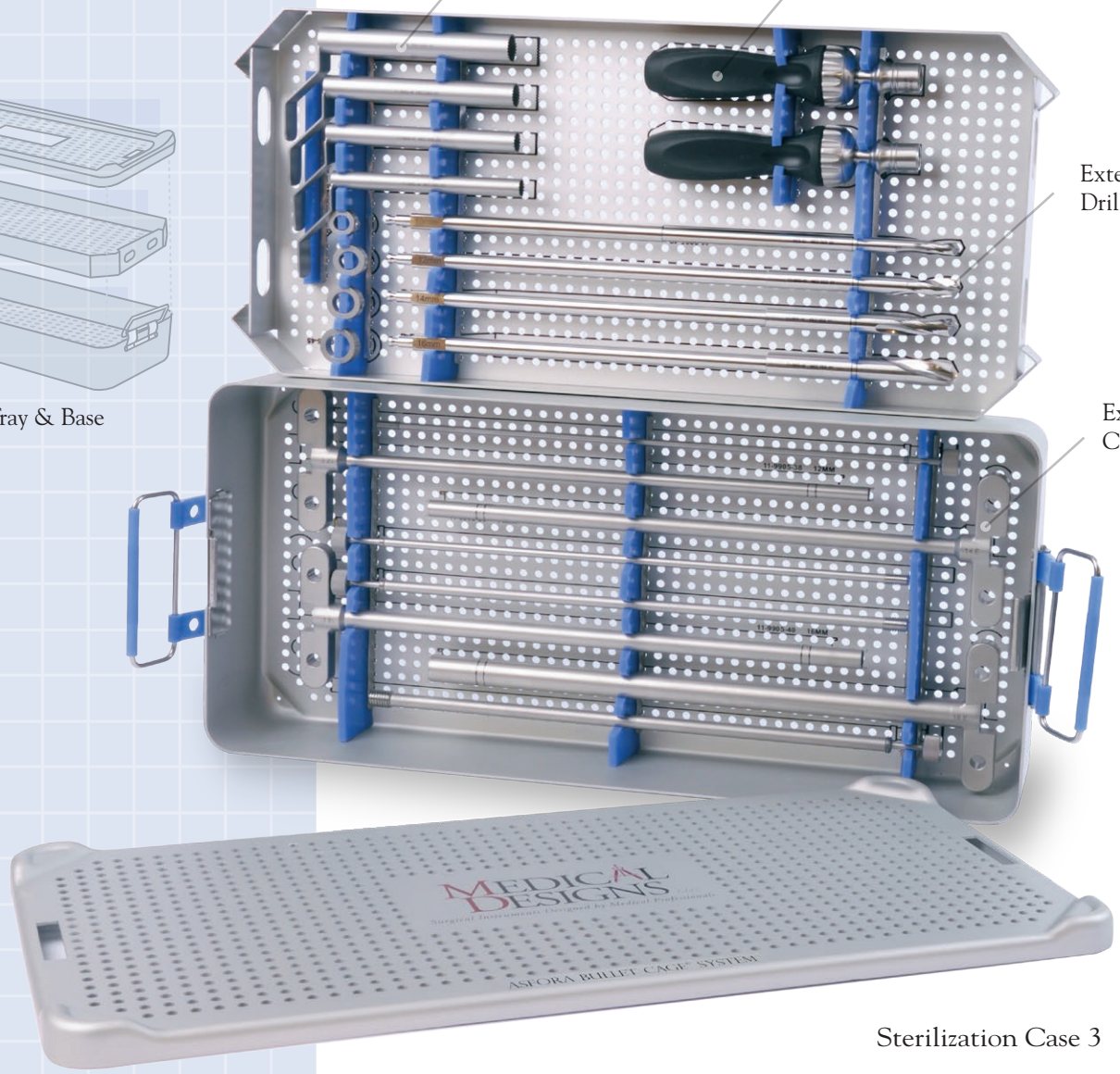

Sterilization Case 3

Case 3 Instruments

Qty	Item Number	Description
1	11-9905-FD31-3	Sterilization Case 3
1	11-9905-FD38	12mm Extended Cage Inserter
1	11-9905-FD39	14mm Extended Cage Inserter
1	11-9905-FD40	16mm Extended Cage Inserter
1	11-9905-FD41	18mm Extended Cage Inserter
1	11-9905-FD42	10mm Extended Drill Bit
1	11-9905-FD43	12mm Extended Drill Bit

Qty	Item Number	Description
1	11-9905-FD44	14mm Extended Drill Bit
1	11-9905-FD45	16mm Extended Drill Bit
1	11-9905-FD46	10mm Long Modified Drill Guide
1	11-9905-FD47	12mm Long Modified Drill Guide
1	11-9905-FD48	14mm Long Modified Drill Guide
1	11-9905-FD49	16mm Long Modified Drill Guide
2	11-9905-FD58	Hudson Axial Extreme Handle

Instrumentation

ASFORA
BULLET CAGE® SYSTEM

Single Drill Guides

Product Description	
11-9905-FD1	10mm Single Drill Guide
11-9905-FD2	12mm Single Drill Guide
11-9905-FD3	14mm Single Drill Guide
11-9905-FD4	16mm Single Drill Guide

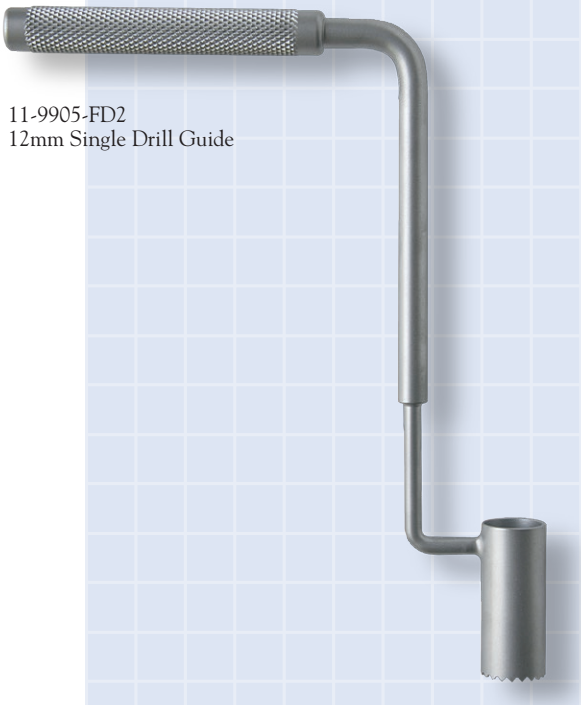

11-9905-FD2
12mm Single Drill Guide

Modified Drill Guides: Short

Product	Description
11-9905-FD34	10mm Short Modified Drill Guide
11-9905-FD35	12mm Short Modified Drill Guide
11-9905-FD36	14mm Short Modified Drill Guide
11-9905-FD37	16mm Short Modified Drill Guide

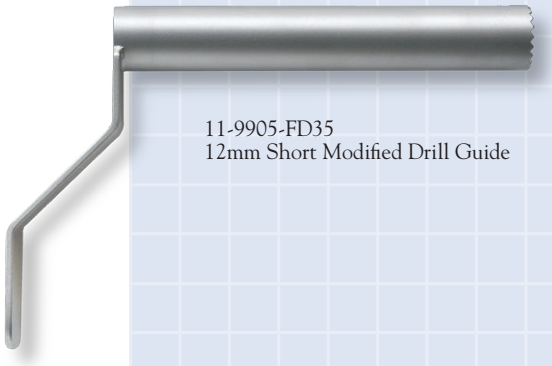

11-9905-FD35
12mm Short Modified Drill Guide

Modified Drill Guides: Long

Product	Description
11-9905-FD46	10mm Long Modified Drill Guide
11-9905-FD47	12mm Long Modified Drill Guide
11-9905-FD48	14mm Long Modified Drill Guide
11-9905-FD49	16mm Long Modified Drill Guide

11-9905-FD48
14mm Long Modified Drill Guide

Inner Cannula

Product	Description
11-9905-FD16	8mm Inner Cannula
11-9905-FD17	10mm Inner Cannula
11-9905-FD18	12mm Inner Cannula
11-9905-FD19	14mm Inner Cannula

11-9905-FD17
10mm Inner Cannula

ASFORA
BULLET CAGE® SYSTEM

11-9905-FD7
10mm Drill Bit

11-9905-FD43
12mm Extended
Drill Bit

Instrumentation

Drill Bits

Product	Description
11-9905-FD5	6mm Drill Bit
11-9905-FD6	8mm Drill Bit
11-9905-FD7	10mm Drill Bit
11-9905-FD8	12mm Drill Bit
11-9905-FD9	14mm Drill Bit
11-9905-FD10	16mm Drill Bit

Extended Drill Bits

Product	Description
11-9905-FD42	10mm Extended Drill Bit
11-9905-FD43	12mm Extended Drill Bit
11-9905-FD44	14mm Extended Drill Bit
11-9905-FD45	16mm Extended Drill Bit

Hudson Handles

Product	Description
11-9905-FD11	Hudson T-Handle
11-9905-FD57	Hudson Palm Handle
11-9905-FD58	Hudson Axial Extreme Handle

Retractors

Product	Description
11-9905-FD14	Rigid Retractor
11-9905-FD15	Malleable Retractor

Disc Space Distractors

Product	Description
11-9905-FD12	6mm Disc Space Distractor
11-9905-FD13	8mm Disc Space Distractor

Extended Disc Space Distractors

Product	Description
11-9905-FD59	Extended 6mm Disc Space Distractor
11-9905-FD60	Extended 8mm Disc Space Distractor
11-9905-FD61	Extended 10mm Disc Space Distractor
11-9905-FD62	Extended 12mm Disc Space Distractor
11-9905-FD63	Extended 14mm Disc Space Distractor

11-9905-FD15
Malleable Retractor

11-9905-FD58
Hudson Axial
Extreme Handle

11-9905-FD11
Hudson T-Handle

11-9905-FD57
Hudson Palm Handle

11-9905-FD61 10mm
Extended Disc Space Distractor

11-9905-FD63 14mm
Extended Disc Space Distractor

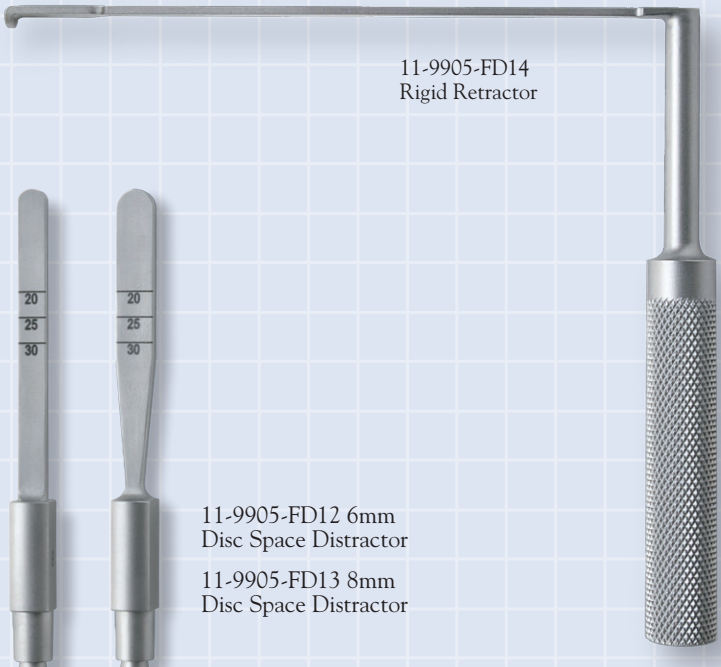

11-9905-FD14
Rigid Retractor

11-9905-FD12 6mm
Disc Space Distractor

11-9905-FD13 8mm
Disc Space Distractor

Instrumentation

Cage Inserters

Product	Description
11-9905-FD32	10mm Cage Inserter
11-9905-FD28	12mm Cage Inserter
11-9905-FD29	14mm Cage Inserter
11-9905-FD30	16mm Cage Inserter
11-9905-FD33	18mm Cage Inserter

Extended Cage Inserters

Product	Description
11-9905-FD38	12mm Extended Cage Inserter
11-9905-FD39	14mm Extended Cage Inserter
11-9905-FD40	16mm Extended Cage Inserter
11-9905-FD41	18mm Extended Cage Inserter

Screwdrivers

Product	Description
11-9905-FD22	Large Endcap Screwdriver
11-9905-FD23	Small Endcap Screwdriver
11-9905-FD24	Large Cage Screwdriver
11-9905-FD25	Small Cage Screwdriver
11-9905-FD26	Cage Removal Screwdriver

Allen Wrench

Product	Description
11-9905-FD64	ABC Allen Wrench

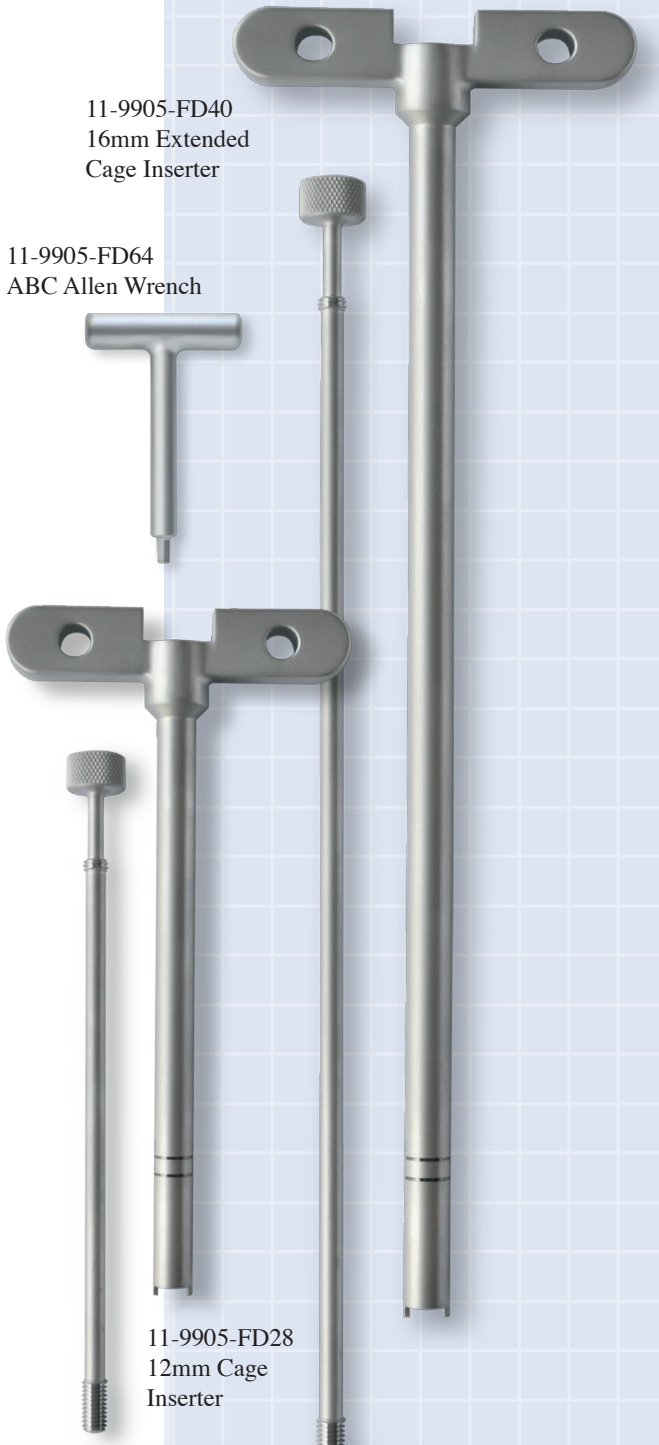

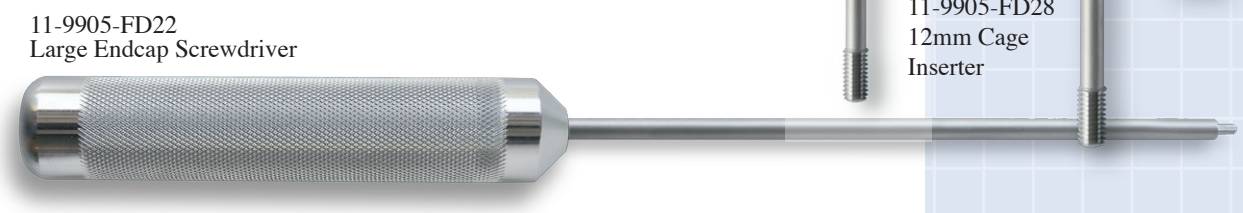

ASFORA
BULLET CAGE® SYSTEM

ABC Complete Instrumentation Set

11-9905-FD31

Qty	Item Number	Description
1	11-9905-FD1	10mm Single Drill Guide
1	11-9905-FD2	12mm Single Drill Guide
1	11-9905-FD3	14mm Single Drill Guide
1	11-9905-FD4	16mm Single Drill Guide
1	11-9905-FD5	6mm Drill Bit
1	11-9905-FD6	8mm Drill Bit
1	11-9905-FD7	10mm Drill Bit
1	11-9905-FD8	12mm Drill Bit
1	11-9905-FD9	14mm Drill Bit
1	11-9905-FD10	16mm Drill Bit
2	11-9905-FD11	Hudson T-Handle
1	11-9905-FD12	6mm Disc Space Distractor
1	11-9905-FD13	8mm Disc Space Distractor
3	11-9905-FD14	Rigid Retractor
1	11-9905-FD15	Malleable Retractor
1	11-9905-FD16	8mm Inner Cannula
1	11-9905-FD17	10mm Inner Cannula
1	11-9905-FD18	12mm Inner Cannula
1	11-9905-FD19	14mm Inner Cannula
1	11-9905-FD22	Large Endcap Screwdriver
1	11-9905-FD23	Small Endcap Screwdriver
1	11-9905-FD24	Large Cage Screwdriver
1	11-9905-FD25	Small Cage Screwdriver
1	11-9905-FD26	Cage Removal Screwdriver
1	11-9905-FD28	12mm Cage Inserter
1	11-9905-FD29	14mm Cage Inserter
1	11-9905-FD30	16mm Cage Inserter
1	11-9905-FD32	10mm Cage Inserter

Qty	Item Number	Description
1	11-9905-FD33	18mm Cage Inserter
1	11-9905-FD31-1	ABC Sterilization Case 1
1	11-9905-FD31-2	ABC Sterilization Case 2 w/Caddy
1	11-9905-FD31-3	ABC Sterilization Case 3
1	11-9905-FD34	10mm Short Modified Drill Guide
1	11-9905-FD35	12mm Short Modified Drill Guide
1	11-9905-FD36	14mm Short Modified Drill Guide
1	11-9905-FD37	16mm Short Modified Drill Guide
1	11-9905-FD38	12mm Extended Cage Inserter
1	11-9905-FD39	14mm Extended Cage Inserter
1	11-9905-FD40	16mm Extended Cage Inserter
1	11-9905-FD41	18mm Extended Cage Inserter
1	11-9905-FD42	10mm Extended Drill Bit
1	11-9905-FD43	12mm Extended Drill Bit
1	11-9905-FD44	14mm Extended Drill Bit
1	11-9905-FD45	16mm Extended Drill Bit
1	11-9905-FD46	10mm Long Modified Drill Guide
1	11-9905-FD47	12mm Long Modified Drill Guide
1	11-9905-FD48	14mm Long Modified Drill Guide
1	11-9905-FD49	16mm Long Modified Drill Guide
2	11-9905-FD57	Hudson Palm Handle
2	11-9905-FD58	Hudson Axial Extreme Handle
2	11-9905-FD59	Extended 6mmDisc Space Extractor
2	11-9905-FD60	Extended 8mm Disc Space Distractor
2	11-9905-FD61	Extended 10mm Disc Space Distractor
2	11-9905-FD62	Extended 12mm Disc Space Distractor
2	11-9905-FD63	Extended 14mm Disc Space Distractor
1	11-9905-FD64	ABC Allen Wrench

MEDICAL DESIGNS L.L.C.

Surgical Instruments Designed by Medical Professionals

6709 South Minnesota Avenue, Suite 204, Sioux Falls, SD 57108
Phone: (888) 276-7271 Fax: (605) 335-3734
www.medicaldesignsllc.com

ED0232RA